Tutorial-11

1. For each of the cascaded counter configurations in Fig. 1, determine the frequency of the waveform at each point indicated by a circled number, and determine the overall modulus.

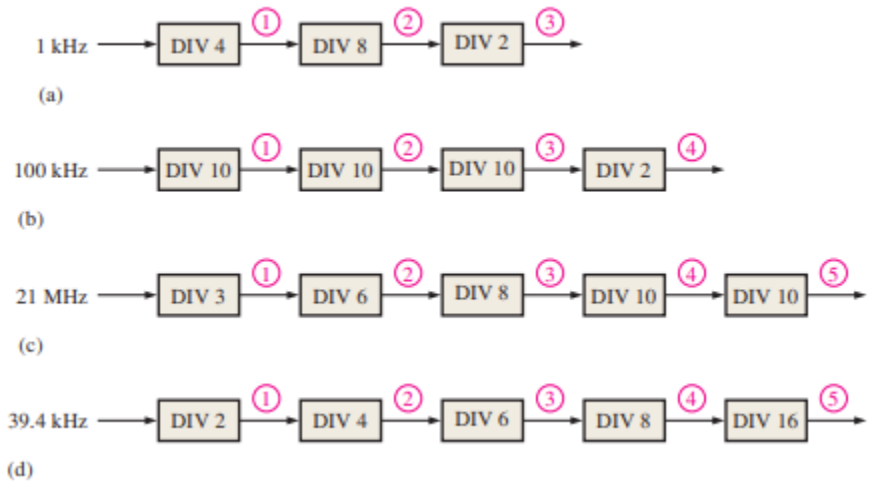

Figure 1: Cascade counters

2. Expand the counter in Fig.2 to create a divide-by-10,000 counter and a divide by-100,000 counter.

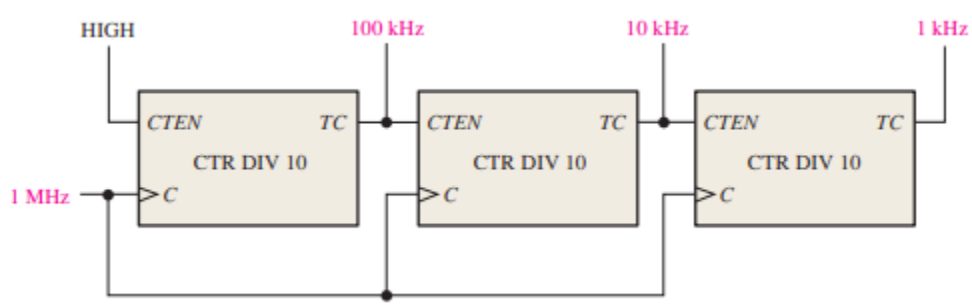

Figure 2: Cascaded decade counter

3. With general block diagrams, show how to obtain the following frequencies from a 10 MHz clock by using single flip-flops, modulus-5 counters, and decade counters:

(a) 5 MHz (b) 2.5 MHz (c) 2 MHz (d) 1 MHz (e) 500 kHz
(f) 250 kHz (g) 62.5 kHz (h) 40 kHz (i) 10 kHz (j) 1 kHz

4. For the 4-bit binary counter connected to the decoder in Fig .3, determine each of the decoder output wave forms in relation to the clock pulses.

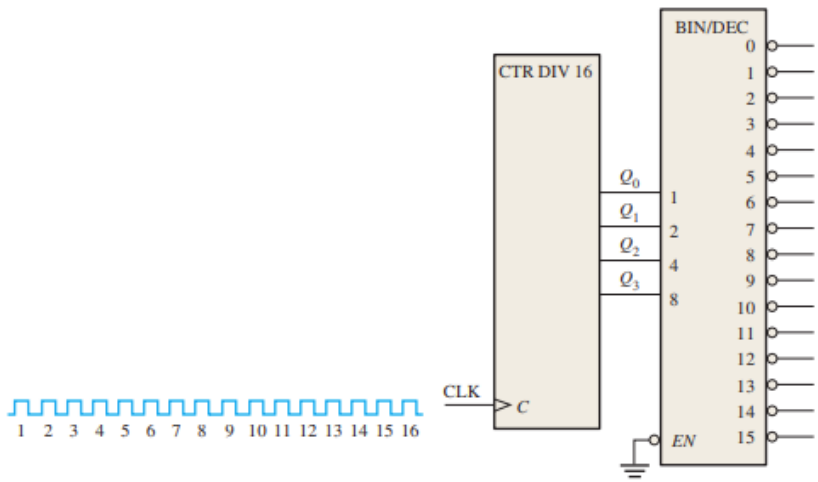

Figure 3: 4 bit binary counter connected with decoder

5. Design a sequence detector that can detect 1010 using both melay and moore machine considering both overlapping and non overlapping case.

6. Design an FSM for a vending machine as per the description given below.

   Description: A vending machine is an automated machine that provides items such as snacks, chocolates, ice creams and cold drinks to consumers after money, a credit card, or a specially designed card is inserted into the machine. The vending machine in the present case of consideration sells bottles of water for 75 cents. Design a Vending Machine which accepts dollars (worth 100 cents) and quarters (worth 25 cents). Once a sufficient amount of money is entered the vending machine will dispense a bottle of water. If the user entered a dollar it will return one quarter in change. A "Money Receiver" detects when money has been entered. The receiver sends two signals to FSM indicating whether a dollar or quarter has been received. A "Bottle Dispenser" system holds the water bottles and release one water bottle when its input signal is asserted. A "Coin Return" system holds quarters for change and release one quarter when its input signal is asserted. The money receiver will reject money if a dollar and quarter are entered simultaneously or if a dollar is entered once the user has started entering quarters.

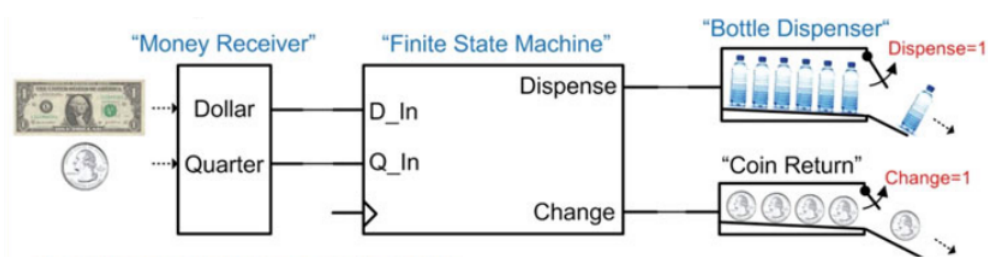

Figure 4: Vending machine